DOCK PLANNING
STANDARDS

4Front Engineered Solutions, Inc. - KELLEY
1612 Hutton Drive, Suite 140
Carrollton, Texas 75006

Tel 800-558-6960
Fax 800-883-3296
e-mail: sales@kelleycompany.com
www.kelleycompany.com

DOCK PLANNING
STANDARDS

KELLEY®

Table of Contents

INTRODUCTION **1**
SITE DESIGN **2**
Locating the Loading Docks 2
Planning On-Site Traffic Flow 2
Designing Apron Space 3
Selecting the Loading Dock Configurations 5
Inside/Outside Dock 5
Open Dock 6
Additional Dock Configurations 7
Saw-Tooth Dock 7
Pier Dock 8
Free Standing Dock 8
Calculating the Number of Dock Positions 8
DESIGNING THE LOADING DOCK **9**
Truck Sizes and Weights 9
Under Ride Protection Bars 10
Setting the Dock Height 10
Setting the Loading Bay Widths 11
Determining Door Sizes 11
Designing the Dock Interior 12
SELECTING DOCKLEVELERS **12**
Comparing the Dockleveler Types 12
Recessed Docklevelers 12
Edge-of-Dock Docklevelers 14
Specifying the Right Dockleveler 14
Length 14
Width 15
Lip Projection 15
Load Capacity 16
Activation System 17
Environmental Capability 17
Specifying the Elevating Dock 17
SELECTING BUMPERS **18**
SELECTING TRAILER RESTAINTS **19**
Types of Trailer Restraints 20
ICC Dependant Restraints 21
Powered Wheel Chocks 22
Dock Run-Off Protection 23
Gate Barriers 23
Lip Barriers 23
SELECTING SEALS AND SHELTERS **24**
Compression Foam Dock Seals 25
Truck Shelters 27
ACCESSORIES **28**
Selecting Dock Doors 28
Selecting Dock Lights 28

KELLEY®

INTRODUCTION

Loading docks perform a critical function in the logistics system infrastructure. They form the link between manufacturing and transportation, and between transportation and storage functions. Since logistics is becoming more and more scrutinized in the overall effort to drive down costs, it follows that loading docks must be efficient and meet high standards.

This booklet provides guidelines for planning a modern, efficient and safe loading dock for handling palletized goods. The typical loading dock for palletized goods includes a raised loading platform, a dockleveler that forms a ramp between the dock and the delivery trucks, a trailer restraint to positively lock the trailer in place during loading/unloading and forklifts or pallet jacks to move the goods in and out of the trucks.

Designing the loading dock is an integral part of the facility process design. The planning starts at the point where traffic enters the facility property from the public road and ends where the trucks leave the property. The dock marks the beginning and the end of material flow through the facility. It integrates material handling inside the building with truck traffic outside the building. To maintain productivity, it must be as efficient as the facility it serves.

The loading dock is also a place of potential hazard. To protect workers, design it with the same high safety standards you apply to the rest of the facility.

SITE DESIGN

Locating the Loading Docks

To reduce material handling costs, locate the loading dock where it minimizes in-plant forklift traffic. It is easier to move a loaded truck to specific points around the building than it is to move the contents of that truck pallet-by-pallet inside the building.

Choose the loading dock location based on the needs of the in-plant process. Typically, loading docks are placed in one of two patterns:

- Combined, so that shipping and receiving are together (Fig. 1).
- Separated, with shipping and receiving at different locations (Fig. 2).

The combined dock is a good choice for smaller plants, with little receiving or shipping. However, since it has to serve both functions, its location often increases the travel distances for in-plant traffic.

Plan for separated docks at plants where the materials enter the production line in one part of the building and the production is completed in another. This arrangement minimizes in-plant movement of materials.

Planning On-Site Traffic Flow

The truck driver has a better view of and control of a truck when sitting on the inside of the turn. So, plan traffic flow around the facility that places the truck driver on the inside of each turn. Where the driver sits on the left side of the truck cab–in countries with right side road traffic–plan for counter-clockwise truck movement around the building (Fig. 3).

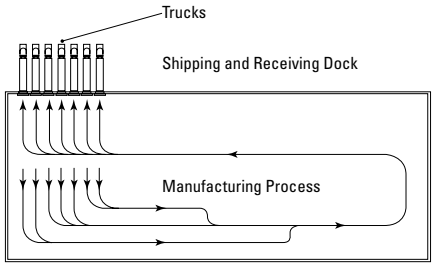

Fig. 1

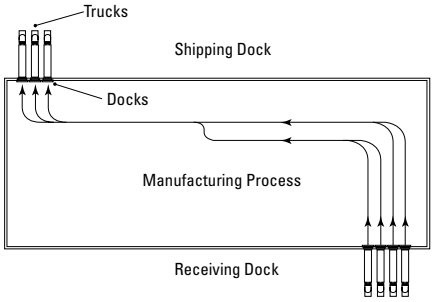

Fig. 2

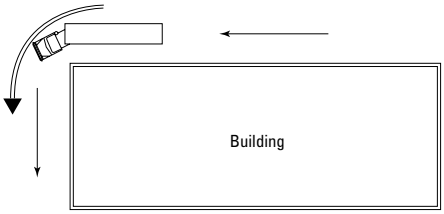

Fig. 3

For efficient on-site truck traffic, include the following elements in your design:

- An entrance driveway that is large enough to handle the turning radius of the longest truck serving the site. For efficiency and safety, permit trucks to be driven forward onto plant property, rather than backed up.
- Right angle turns onto the site that has a minimum inside radius of 26' and a minimum outside radius of 50' (Fig. 5).
- One-way access roads that are at least 13' wide and two-way roads that are at least 26' wide (Fig. 5).
- Employee roadways that are separate from truck traffic.
- Truck waiting areas adjacent to the loading docks. Unless you design the loading docks for peak arrival traffic, the waiting area has to accommodate all waiting trucks.

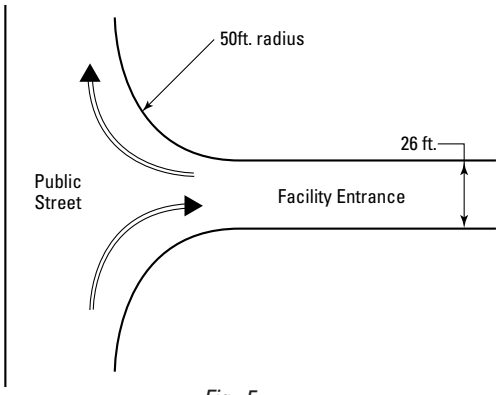

Fig. 5

Designing Apron Space

The Apron Space is the space between the loading platform and the fence line or nearest obstruction. It includes the parking area, where the truck is parked during loading, and the maneuvering area; the space needed to maneuver the truck in and out of the parking area (Fig. 6 and Fig. 7). The minimum recommended center distance between the dock positions is 12'.

The minimum apron space needed depends on the center line distances between the parked trucks at the dock, the length of the trucks, and the steering geometry of the trucks. Also, if the trailers will be parked with the tractors detached, less apron space is needed.

The table below gives the minimum apron space for a typical 40 foot container rig.

Center Distance	12'	13'	14'	16'	18'
Apron Space	120'	116'	113'	110'	108'

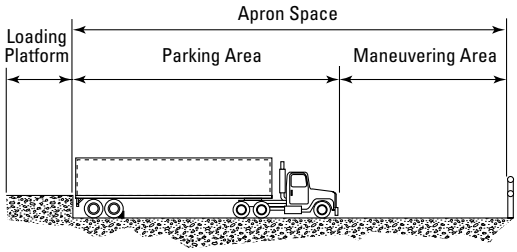

Fig. 6

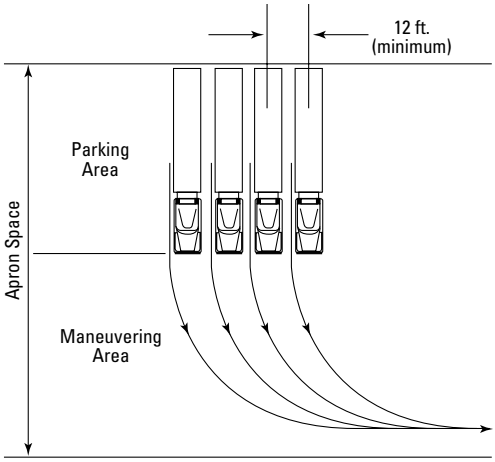

Fig. 7

We recommend this as the minimum. If the expected trucks are longer than that, increase the space proportionately, e.g. if the dock will handle 48 foot trailers, increase the space shown in the table by 20%. If the traffic pattern is such that the driver will make an outside turn add 50'.

If the plant floor is at grade, or has a low grade, recess the truck parking area so that the trailer bed will be at about the same height as the floor (Fig. 8). The parking area will then slope down toward the dock. Ideally, this slope should be 6%, or less. If heavy loads will be handled, slope should be no more than 3-5%. However, if space does not permit, you may increase the slope to an absolute maximum of 10%, and this will work only for light loads. Steep slopes force dock workers to load on an incline inside the truck and may cause loads to topple.

Also design drainage for recessed parking areas. As part of this design, the area next to the building should slope slightly away from the building for 1' to 3' (Fig. 9). A short area is preferable because the position of the trailer's rear axle will then have less of an effect on the height of the trailer bed at the dock.

If the truck parking area is unpaved or is paved with asphalt, provide a concrete, landing gear pad at a suitable distance in front of and parallel to the dock wall (Fig. 10). This pad is needed to support the trailer's landing gear when the trailer is parked without its tractor. For a standard 40' container chassis, the landing gear is about 33' from the back of the trailer, for a 20' chassis the gear is about 11'. Design a pad wide enough to handle the expected variety of trailers. It is also good practice to extend the pad all of the way back to the loading dock. To sustain a fully loaded trailer or a partially loaded trailer with a forklift on board, design the pad to support two point loads of 25,000 lbs. each, 6' apart.

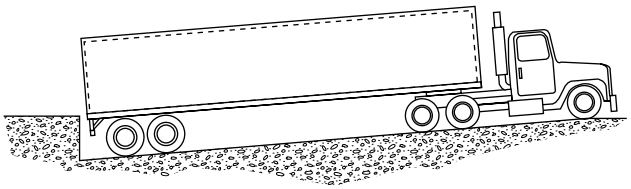

Fig. 8

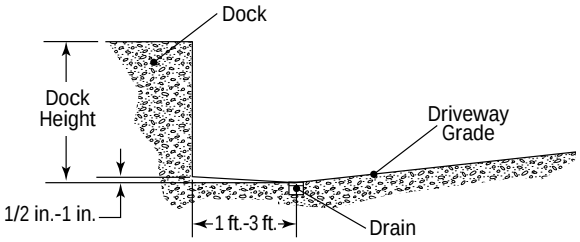

Fig. 9

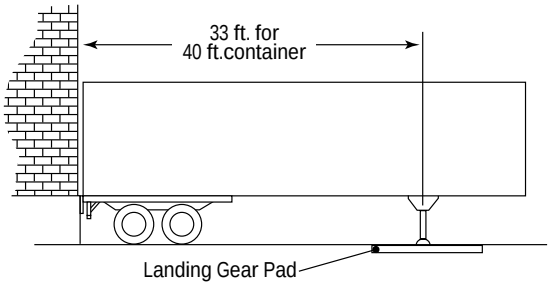

Fig. 10

Selecting the Loading Dock Configuration

Security, traffic control, safety, worker comfort, space availability, and climate help determine which dock configuration you need. Based on the relationship of the building and the trailer, the two most common dock configurations are the inside/outside dock and the open dock.

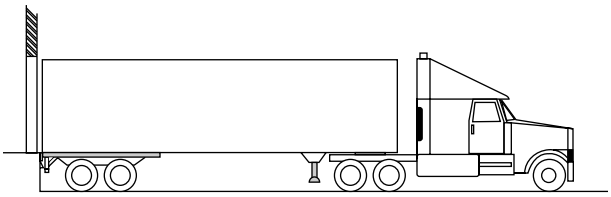

Fig. 11

Inside/Outside Dock

This common design places the loading platform inside the building, while the trailer remains outside (Fig. 11). With the proper door seals or shelter, the design offers excellent weather protection and security. A common variation of the inside/outside dock is the refrigerated dock.

The inside/outside dock design sometimes requires that you set back the building wall from the edge of the dock (Fig. 12). This is the case particularly for docks with recessed parking areas. The setback is needed to:

- Protect the wall from being hit by trucks
- Protect building projections, such as overhangs or signs
- Facilitate the installation of door seals
- Minimize the risk of injury

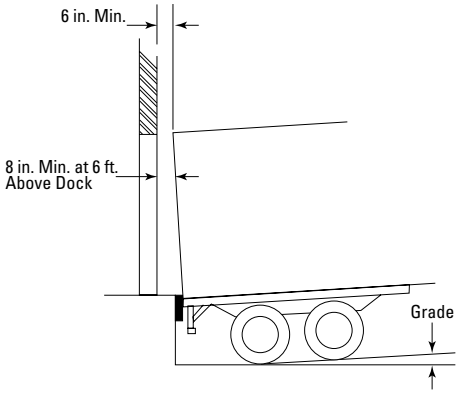

Fig. 12

Allow at least an 8" clearance between the rear of the truck and the building wall, measured at a height of 6' above the dock platform. Also allow at least 6" of clearance between the top of the trailer and the building wall (Fig. 12).

For **refrigerated docks** include a vestibule between the loading platform and the refrigerated area. The vestibule creates an air lock between the outside and the refrigerated area (Fig. 13). The air lock minimizes the inflow of warm air and humidity. A well designed refrigerated dock reduces refrigeration power consumption by 50% or more and it reduces refrigerant coil defrosting by as much as 96%, compared to an open loading dock.

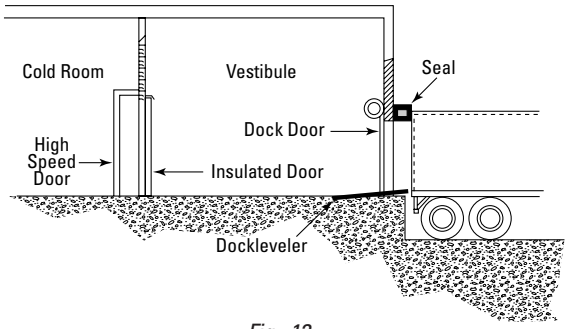

Fig. 13

Open Dock

This design places both the loading platform and the trailer outside the building (Fig. 14). Open docks are commonly used for general warehousing in temperate and warm climates. You can protect the open dock somewhat by adding a canopy over the platform and sliding curtains around the dock perimeter (Fig. 15).

The open dock requires sufficient forklift maneuvering space between building wall and the docklevelers. Also, you must add concrete posts and safety chains, or other barriers, to reduce the risk of forklifts driving off the dock (Fig. 16).

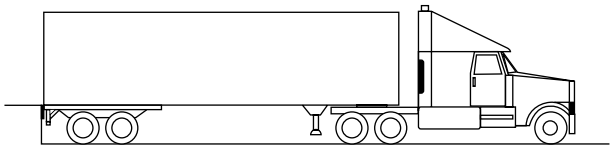

Fig. 14

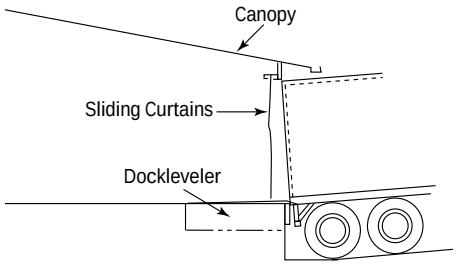

Fig. 15

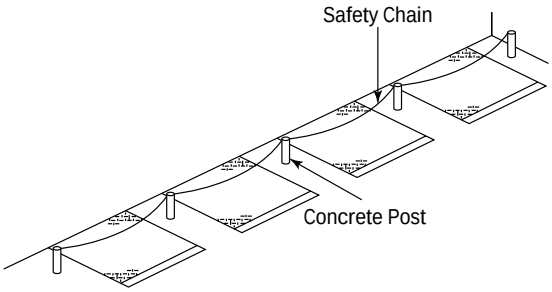

Fig. 16

Additional Dock Configurations

Building and property limitations sometime require the use of still other loading dock configurations.

Saw-Tooth Dock

If there is insufficient space available between the dock and the nearest obstruction to truck flow, a saw tooth layout (Fig. 17) can solve the problem. This design lessens the apron space required to move the trucks into and away from the loading area.

The table below shows the required apron space as dependent on trailer center distance and angle of saw tooth.

Center Dist., ft	Saw-Tooth Angle, Degrees			
	15˚	30˚	45˚	60˚
12'	121'	106'	88'	67'
13'	119'	105'	86'	66'
14'	118'	103'	85'	65'
15'	116'	102'	84'	64'
16'	114'	101'	83'	63'
17'	113'	99'	82'	63'
18'	112'	98'	81'	62'
19'	111'	97'	80'	62'

The table is based on a 53 foot trailer, with the tractor attached during loading. If smaller trucks will use the dock, decrease apron space proportionately. If tractors will be disconnected when the container is parked, decrease the required apron space shown in the table by 24', 22', 18', and 14' for 15˚, 30˚, 45˚ and 60˚ angle respectively. As an example, if the center distance between the dock positions is 14', and the angle of the saw tooth is 45˚, the required apron space is 67'.

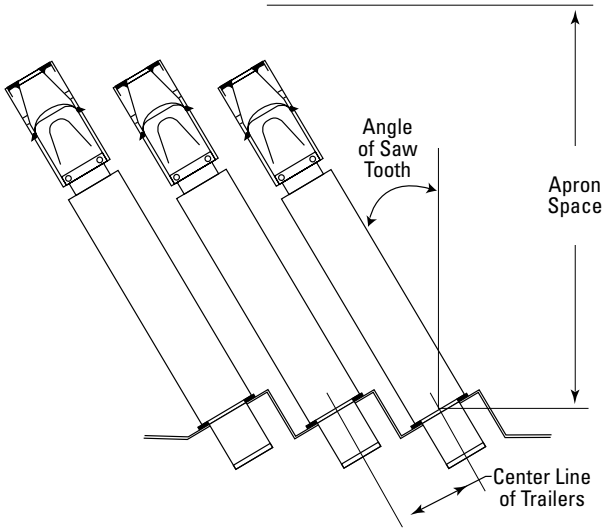

Fig. 17

Pier Dock

When the building lacks enough wall space for the required dock positions, or if the building and process layout do not permit placing dock positions along the building perimeter, you can design a loading dock pier (Fig. 18).

Free Standing Dock

When there is limited space inside the building for a loading platform, you can add a free standing dock structure to the outside of the building (Fig. 19).

Calculating the Number of Dock Positions

To calculate the number of dock positions a facility needs you need to know the number of trucks that will be served, the average time required for loading or unloading each truck, and the timing of truck arrivals and departures.

For operations with seasonal processes, provide enough dock positions to handle peak periods–whether they are on a daily, weekly, monthly, or yearly cycle. When laying out dock positions, also consider providing one dock position for trash disposal.

Sometimes it is not practical to provide enough dock positions to handle peak truck traffic. In such cases, provide a truck waiting area. Truck waiting times and waiting areas can be traded off against the cost of more dock positions. When truck arrivals are numerous, fewer dock positions will mean longer waiting times and larger waiting areas.

You can estimate the number of dock positions you need for a certain truck volume by multiplying the number of trucks per hour times the turnaround time, in hours, for each truck to park, load and leave.

For example: If 20 trucks arrive each 8 hour day (20/8 = 2.5 trucks per hour), and loading takes 50 minutes (50/60 = 0.833 hrs), then the number of dock positions you need are 2.5 x 0.833 = 2.08 dock positions. In this case, provide three positions. If, in this example, all of the trucks were to arrive in the morning (4 hrs), you would need 4.17, or 5, positions.

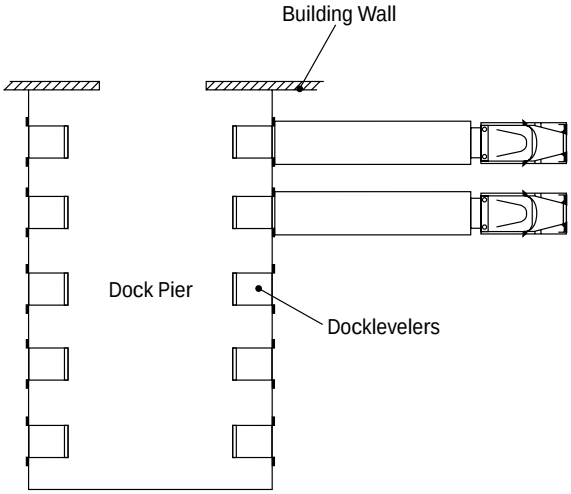

Fig. 18

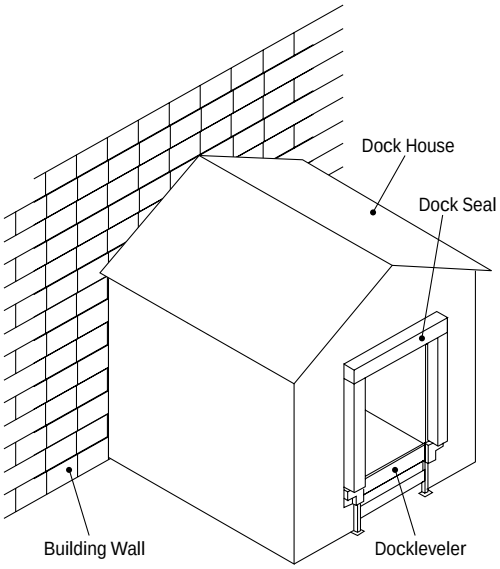

Fig. 19

KELLEY®

DESIGNING THE LOADING DOCK

To design efficient loading docks for a facility you need to review the types and numbers of trucks that will use the docks, the dimensions of the loading docks and their doors, and the characteristics of the facility processes. You must then address the dock height, the loading bay width, the dock door size, and the dimensions and layout of the building interior adjacent to the dock.

Truck Sizes and Weights

To begin with, determine the types and physical features of the trucks that will use the docks. Truck characteristics affect many design parameters. As a minimum, list each truck's:

- Overall length
- Truck or trailer bed height
- Overall height
- Overall width

Fig. 20 shows common truck and trailer designs and their associated dimensions. However, trailer and bed heights can vary by as much as 6" from their loaded to unloaded conditions. Air suspension systems will also affect these dimensions. Use Fig. 20 for preliminary design. Base your final design decisions on actual truck dimension surveys.

Type of Vehicle	Truck Dimensions			
	Overall Length, L	Bed Height, BH	Overall Height, H	Overall Width, W
Container	55'-70'	56"-62"	12'-13'6"	96"
Semi-Trailer, City	30'-35'	44"-48"	11'-13'	96"
Straight Truck	15'-35'	36"-48"	11'-12'	96"
Refrigerated	40'-55'	50"-60"	12'-13'6"	96"-102"
Flatbed	55'-70'	48"-60"	-	96"-102"
Semi-Trailer, Road	55'-70'	48"-52"	12'-13'6"	96"-102"

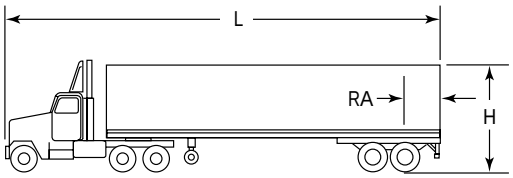

Fig. 20a, Container Truck

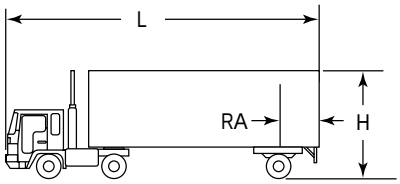

Fig. 20b, Semi-Trailer, City

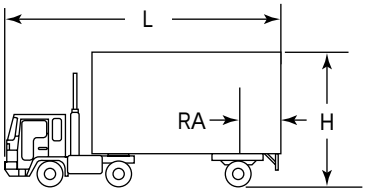

Fig. 20c, Straight Truck

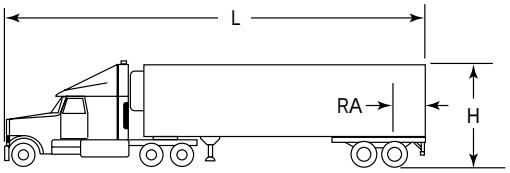

Fig. 20d, Refrigerated Truck

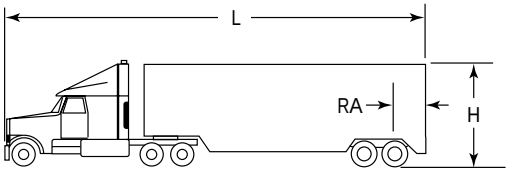

Fig. 20e, Semi-Trailer, Road

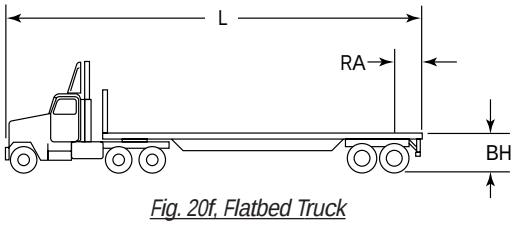

Fig. 20f, Flatbed Truck

Under Ride Protection Bars

Trucks often have an under ride protection bar, called the ICC bar in the US, mounted at the rear of the trailer (Fig. 21). Because of the accessibility and strength of this bumper bar, you can specify loading dock truck restraint devices that will engage the ICC bar to prevent the truck from being accidentally driven away during loading or unloading.

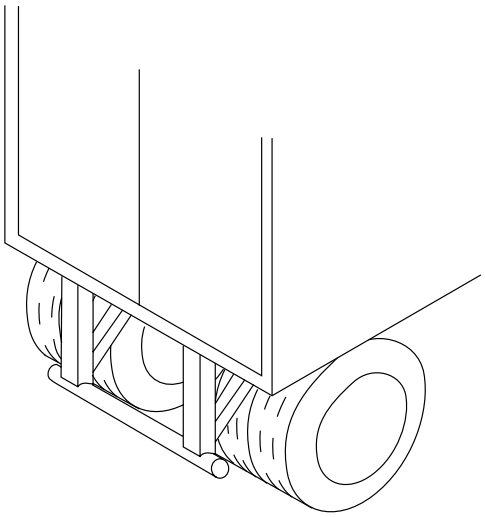

Fig. 21

Setting the Dock Height

The dock height is the most important parameter of the facility's loading docks. Dock height must match the expected truck traffic. When deciding the height, strive for the least possible height difference between the dock and the trailer bed. While the dockleveler bridges some height difference, do not design a dock with too great an incline. A steep incline interferes with the under-clearance of the forklifts. And, as the incline gets steeper, the structural and maintenance demands on the ramp and forklifts increases.

To determine the dock height, first review the bed heights of the trucks using the dock. Then, select a height that is at the midpoint of this range. As a general guideline, most trucks will require a dock height of between 46" and 52".

This table lists dock heights that create level dock designs for various trucks.

Truck Type	Dock Height
Container	55"
Semi-Trailer	48"
Straight Truck	44"
Refrigerated	52"
Flat Bed	52"

Note: truck beds at a receiving dock will rise during unloading and truck beds at a shipping dock will lower during loading.

If the parking area in front of the dock is recessed, lower the dock height (Fig. 22). In extreme situations, the recessed driveway can lower the truck bed height by 6" to 10".

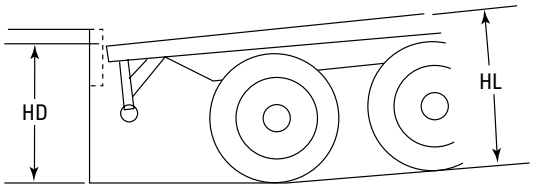

HL = Bed height when level
HD = Bed height at dock

Fig. 22

If you anticipate trucks with extremely high or low bed heights, provide separate positions with special driveways and equipment for them. A typical solution for this situation includes an elevating dock (Fig. 23).

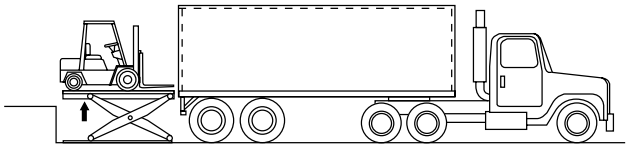

Fig. 23

On open docks it is often necessary to open the trailer doors after the trailer is parked. For this situation select a dock height that is low enough to allow the door clamp hooks to clear the dock as they are opened (Fig. 24). A typical dock height for these circumstances is 51". If the parking area in front of the dock is recessed, the dock height will have to be lowered further since the doors swing down slightly as they are opened. As a general guide, lower the dock by 1" for each one percent of recessed parking area grade.

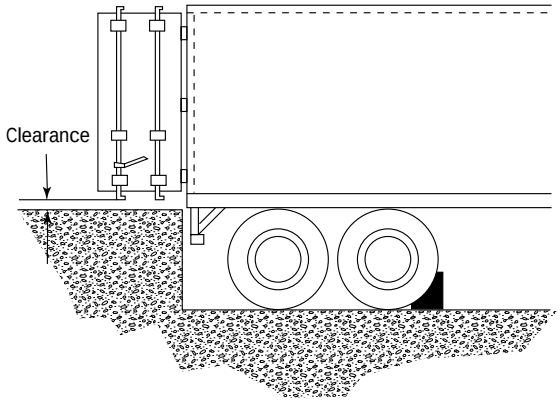

Fig. 24

Setting the Loading Bay Widths

A modern trailer is 8'0"-8'6" wide. Make each truck bay at least 12' wide to provide sufficient space to back the trailers squarely to the dock. To reduce congestion inside and outside the dock, 14' wide bays are a better design. If it will be required to open or close swinging trailer doors at the dock, make the center distance at least 14' (Fig. 25).

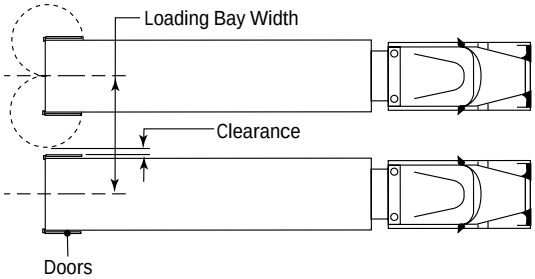

Fig. 25

Determining Door Sizes

Determine the door sizes together with selecting the system that will seal the trailer to the building. In temperature controlled docks doors are also energy loss areas, so keep them as small as possible without interfering with loading operations.

Common door widths are 8'. Common door heights are 8', 9' or 10'. If clear access to the full width and height of a full size trailer is required, extend the dock door the full height of the trailer (13' to 14') above the driveway. Also size the doors 8'6" - 9'0" wide to allow for off-center trailer parking.

Doors narrower than 8' are usually required for refrigerated operations to permit seals that allow effective environmental control.

Designing the Dock Interior

Provide a clear traffic aisle, at least 15' wide, behind the loading ramps. This aisle will improve visibility, permit forklifts to maneuver behind the trailers, and allow two-way forklift traffic parallel to the dock face. Aisles of this width or greater also allow forklift drivers to drive straight onto the docklevelers, reducing stress on the equipment and improving safety (Fig. 26).

Design restrictions that hinder forklift drivers from traveling parallel to the dock face across the dock-levelers (Fig. 27). Crossing traffic behind the trailers creates an extreme hazard to forklift drivers backing out of their trailers.

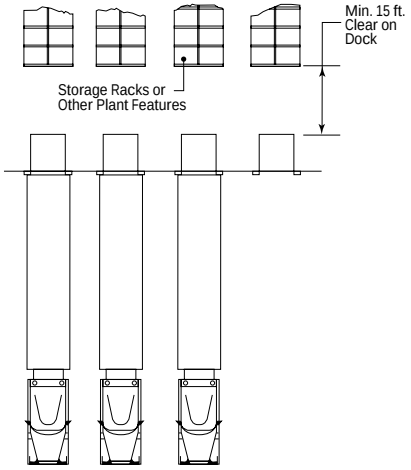

Fig. 26

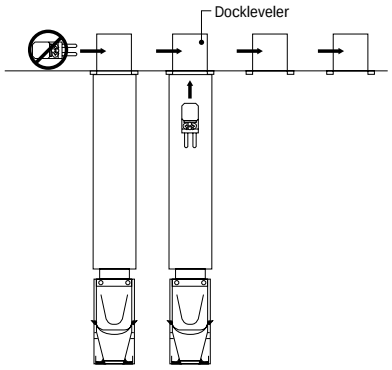

Fig. 27

SELECTING DOCKLEVELERS

A dockleveler bridges the gap and height difference between the dock and the trailer. It also compensates for the up and down float of the trailer bed during loading. A dockleveler includes a ramp (hinged along its rear edge) and a lip (hinged at the front of the ramp). When not in use, the dockleveler is stored in its neutral position, flush with the loading platform floor. To use a dockleveler, the operator raises the ramp and the lip swings out. With the lip extended, the operator lowers the ramp until the lip rests on the truck.

Comparing the Dockleveler Types

The two common types of docklevelers are:

- A recessed type, installed in a pit formed in the loading platform (Fig. 28).
- An edge-of-dock type, installed on the curb of the loading platform (Fig. 29).

Recessed Docklevelers

The recessed dockleveler is the most common type and has the greater operating range above and below dock. It also has the greater load range and longer life expectancy. It is available in ramp lengths of 6' to 12'.

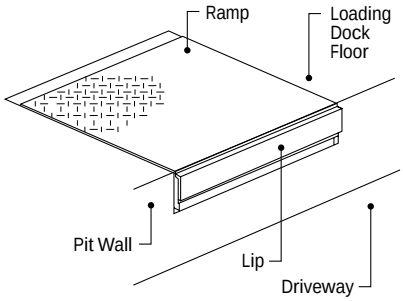

Fig. 28

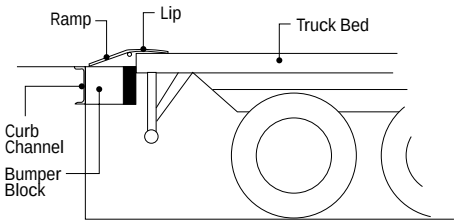

Fig. 29

Recessed docklevelers are available in powered, push-button operation or spring-loaded mechanical operation. Powered push-button models are easier to operate.

Powered push-button docklevelers are activated by either an air or hydraulic system. The low pressure air operated system (Fig. 30) has a very simple design: an air bag connected to a fan lifts the ramp. The weight of the ramp then extends the lip onto the truck bed. The design is very reliable and requires only minimal maintenance.

Push-button hydraulic docklevelers (Fig. 31) are powered by a hydraulic system that raises the ramp. They are very reliable but require more maintenance than air powered designs because of their more complicated components, fluid circuits and electrical circuits.

Mechanical, spring-loaded docklevelers (Fig. 32) are upwardly biased with a spring and linkage system and are held down by a releasable ratchet device. To raise the ramp, a dock worker pulls a release chain connected to the ratchet mechanism. The worker then walks out on the ramp to force it down onto the truck bed. Once on the truck bed, the ratchet mechanism re-engages to prevent the ramp from rising again. Mechanical docklevelers require regular maintenance and adjustments for reliable operation.

Depending on ramp length, recessed docklevelers can serve trailers as much as 18" above and below the dock. A common range is 12" above and 12" below dock height. They are available in capacities up to 40 tons.

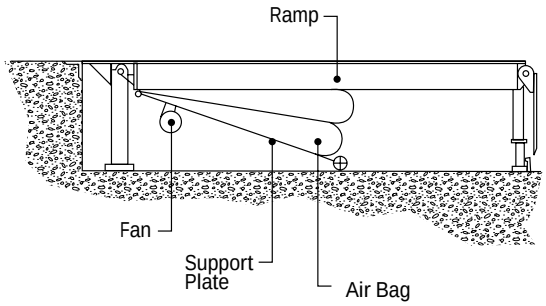

Fig. 30

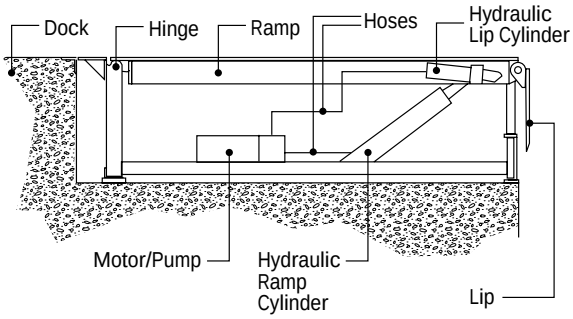

Fig. 31

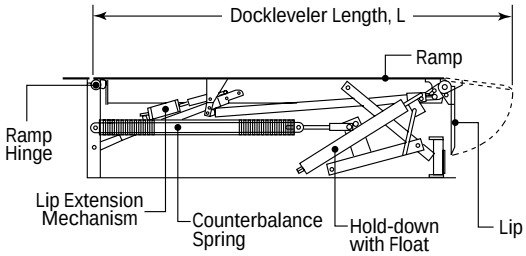

Fig. 32

Edge-of-Dock Docklevelers

The Edge-of-Dock (EOD, Fig. 33) dockleveler is a low cost alternative. It is suited for a small range of applications where there is little variation in truck bed height and where pallet truck under-clearance is not an issue (see Fig. 36). Because of its short ramp, the EOD is restricted to a narrow service range of 5" above or below the dock.

The EOD dockleveler is available in manual or push-button operated designs. Manual models are lifted manually, assisted by counterbalancing springs. Push-button operated models work much like push-button operated recessed docklevelers, and are activated by either an air or hydraulic system.

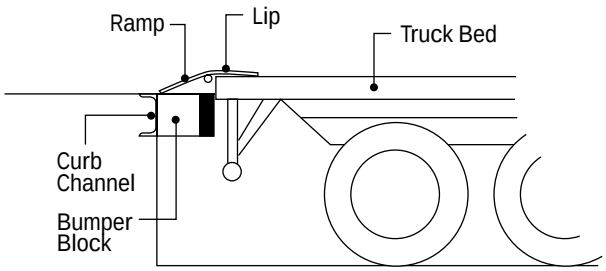

Fig. 33

Specifying the Right Dockleveler

Because of its wider range of operation, the recessed model dockleveler is always the best choice to accommodate a wide range of trailer bed heights. You should specify the EOD dockleveler only if the facility operates within the narrow applications suitable for the EOD.

Docklevelers have long lives. Because they contribute significantly to facility efficiency, it is very important to accurately specify each of the following dockleveler characteristics:

- Length
- Width
- Lip projection
- Load capacity
- Activation system
- Environmental capability

Length

The length of the dockleveler significantly determines the dockleveler slope. This slope has to be less than the maximum grade capability of the loading equipment. The required length of the dockleveler is based on the maximum height differential between the loading platform and the expected truck beds.

To choose the right dockleveler length, see table below. The lengths shown in the table represent the minimum dockleveler length required to keep the dockleveler ramp slope within the capability of the loading equipment.

Height Difference Between Truck Bed And Dock	Loading Equipment			
	Hand Pallet Truck	Electric Pallet Jack	Electric Forklift	Gas Fork Truck
2"	5'	27"	27"	27"
4"	12'	5'	30"	27"
6"	--	8'	5'	30"
8"	--	10'	6'	5'
10"	--	12'	8'	6'
12"	--	--	10'	8'
14"	--	--	12'	10'
16"	--	--	--	10'
18"	--	--	--	12'

For height differentials or loading equipment not shown in the figures, determine the minimum dockleveler length by dividing the height differential from truck to dock by the equipment's maximum grade capability.

For forklifts and pallet trucks to move freely and safely over a dockleveler, they must have sufficient ground clearance. (See Fig. 34 and Fig. 35.)

Checking clearances is especially important when pallet jacks will be used on EOD docklevelers (Fig. 36). Clearance is, in general, less of a concern when pallet jacks are used on recessed levelers. If ground clearance is a concern, consult with the equipment supplier.

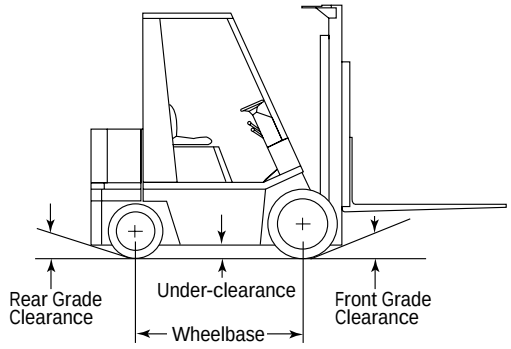

Fig. 34

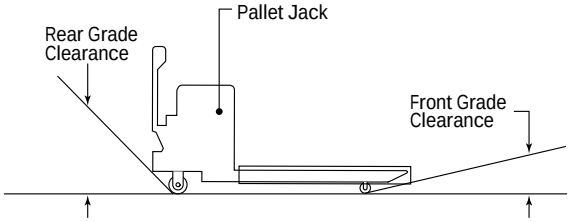

Fig. 35

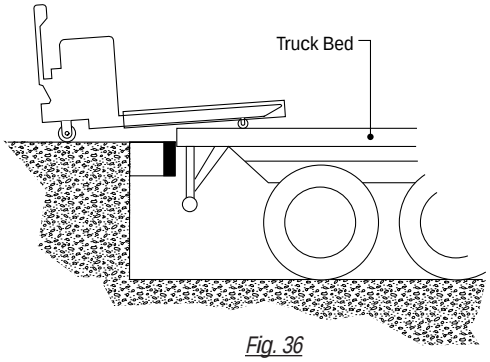

Fig. 36

Width

Docklevelers are available in 6', 6-1/2' and 7' widths. The most common width is 6'. It suits most facilities with palletized containers. However, 7' widths are recommended when below dock loading/unloading is common.

Lip Projection

The dockleveler lip must extend sufficiently into the truck to provide firm support. The lip must provide at least 4" of support, as shown in (Fig. 37).

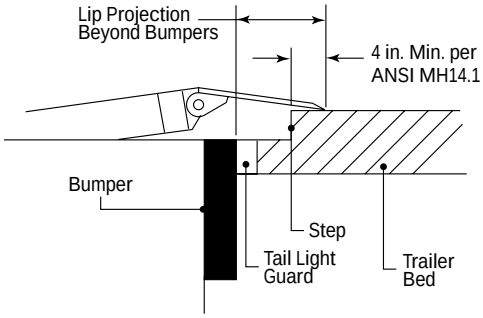

Fig. 37

Under most circumstances adequate support is provided by a standard lip, which projects 12" in front of the dock bumpers. Specify longer lips to accommodate the special rear step and rear door configurations on some trailers. The step of refrigerated trailers may require a 14" or longer lip projection.

Load Capacity

Choosing the right load capacity for a dockleveler can greatly extend the dockleveler's life. The dockleveler's load capacity is dependent upon the gross vehicle weight (GVW) of the forklift using the dockleveler.

The GVW includes the weight of the forklift plus the weight of the maximum anticipated load. For electric forklifts the GVW also must include the weight of the battery.

As a guideline, the empty weight of propane and gasoline powered forklifts is within the range of 170-210% of its load capacity. Electric forklifts weigh about 1100 lbs.-1800 lbs. more because of the batteries.

To determine the dockleveler's load capacity, first determine the forklift's Gross Vehicle Weight (GVW). The minimum required dockleveler load capacity is the forklift's GVW multiplied by 1.5. However, if one of the following conditions exists, multiply the GVW by 2.1. If two or more of the following conditions exist, multiply the GVW by 2.55.

Conditions Affecting Load Capacity

- More than eight trucks per day will be served at the dock position.
- Forklifts will drive onto the dockleveler at an angle rather than straight ahead.
- Three-wheeled forklifts will be used.
- The expected forklift speeds will exceed 4 mph.
- The forklifts will be outfitted with front end attachments or fork side shifters.

Activation System

For ergonomic and safety reasons, the trend in dockleveler operating systems is toward push-button operation. Manual and spring counterbalance activation should be selected only when no power is available at the loading platform. Because they require less maintenance and repair, push button operated units cost less in the long run.

Environmental Capability

On inside/outside docks at temperature controlled facilities, specify perimeter weather seals for the dockleveler. These seals keep outside air from infiltrating the building.

For refrigerated facilities, also specify that the underside of the dockleveler ramp is insulated. Condensation that forms on the underside of the ramp causes corrosion and premature structural problems. This insulation helps prevent the warmer outside air from reaching the underside of the ramp and condensing there. It also minimizes the loss of refrigerated air from inside the facility.

Specifying the Elevating Dock

Hydraulic elevating docks allow forklifts to enter trucks with bed heights outside the operating range of docklevelers. They can be used for lowering forklifts from the loading dock down to the ground. Elevating docks are made in the scissors lift design, with lips added to allow transfer of forklift to the dock and to the truck (Fig. 38). With Elevating Docks, it is also possible to load from the ground (Fig. 39).

A table 6' wide, 8' long and with a 4500 lbs. capacity is the most common. For applications where rider forklifts will be used, a 6' wide 10' long table with 5 tons capacity is common.

Elevating docks are rated for maximum Gross Vehicle Weight (GVW). The capacity is the weight that can be supported and lifted by the hydraulic system. Standard docks are available in capacities up to 10 tons. Common vertical travel is 6'.

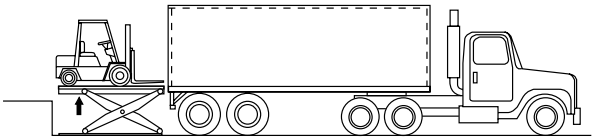

Fig. 38

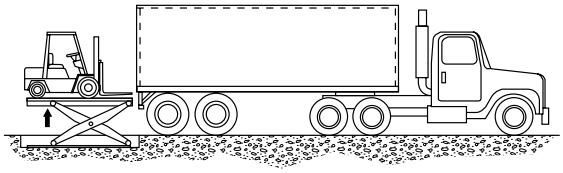

Fig. 39

SELECTING BUMPERS

Bumpers protect the building and the truck from impact damage when the truck is docking (Fig. 40). Bumpers can reduce the impact of a backing truck by 90 - 95%. They also provide protection during the loading operation when the truck rocks or floats up and down while it is pressed against the building. Finally, bumpers limit how close the truck is parked to the dock and thus affect dockleveler lip and seal and shelter projections.

Since they absorb large impacts, mount bumpers firmly to the dock. Bumpers are available in molded or laminated rubber. The standard bumper thickness is 4", but laminated bumpers are also available in 6" thickness. The 4" bumper is preferred, since it reduces the gap between the trailer floor and the face of the dock.

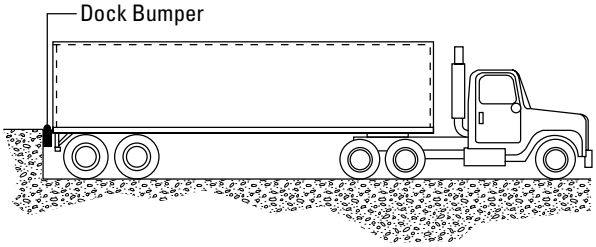

Fig. 40

SELECTING TRAILER RESTRAINTS

A truck must not leave the loading dock before loading/unloading is complete. If it does, the separation of the truck from the building can cause serious injury or death of the dock worker and damage to the forklift and cargo. A trailer restraint is a device that locks the truck in place at the dock during loading/unloading. The restraint, operated from the dock, puts control of the trailer departure in the hands of the dock attendant.

There are four main causes of unexpected trailer separation.

1. Premature Departure – As the lift truck operator moves in and out of the trailer, the truck driver, mistakenly assumes that the loading/unloading is complete and pulls away from the dock without warning. This premature departure creates a dangerous gap for the lift truck and driver to fall into.
2. Trailer Creep – As a lift truck and load enter a truck, the impact causes the trailer to inch forward, away from the dock. Heavy braking accelerates this creeping movement. When the truck moves beyond the reach of the dockleveler lip, the lip falls, creating a large gap. The lift truck and driver may then fall off the leveler or trailer onto the driveway.
3. Dock Walk – The increased usage of air-ride suspensions on trailers has caused an unanticipated and potentially dangerous situation at loading docks. Referred to as "Dock Walk", it occurs with trailing beam type suspensions equipped with air bag springs. As the air bag suspension loses air, the trailer axle moves through an arc. If the trailer wheels are braked and do not move, the trailer chassis moves forward as the suspension settles with the weight of the lift truck. The result is a potentially dangerous gap between the trailer and the loading dock. When supported by the trailer landing gear legs, this movement may also cause damage or collapse of the trailer's landing gear legs.
4. Landing Gear Collapse – Trailers can be parked at the loading dock, detached from the tractor, with the nose supported by the landing gear. The momentum of a loaded lift truck entering a trailer can cause the trailer to inch forward. If the landing gear structure is in poor condition, this movement can cause landing gear failure.

Types of Trailer Restraints

Trailer restraints come in two designs, ICC dependant (Fig. 41) and powered wheel chocks (Fig. 42).

Most over the road trailers are required to have rear underride guards, also known as ICC bars. ICC dependant restraint systems engage the trailer's rear underride guard and use this structure to lock the trailer in place during loading/unloading. The most common type of restraint is the ICC dependant system.

Powered wheel chocks focus on restraining the wheel and do not rely upon an underride structure at the rear of the trailer. Trailers that are unrestrainable by underride guard systems, those with hydraulic lift gates, tandem hitches, and damaged guards, can be captured and restrained by powered wheel chocks. Their application therefore, is more universal.

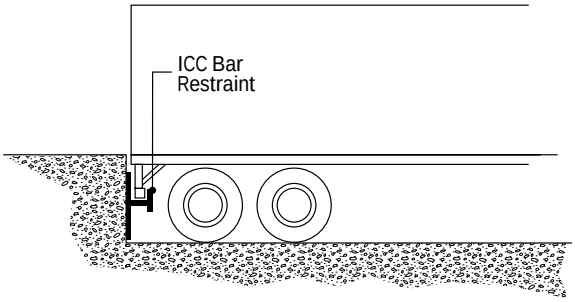

Fig. 41

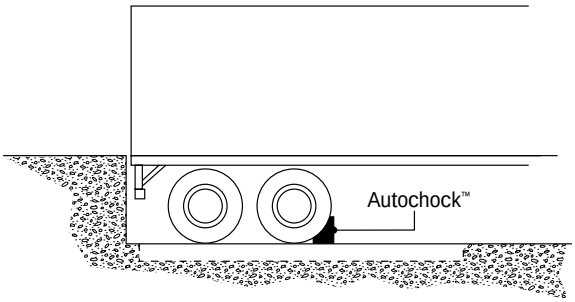

Fig. 42

ICC Dependant Restraints

ICC dependant restraints are available in manual and powered activation designs. These restraints can engage underride guards from 11" to 30" off grade.

To engage a manual restraint, the dock worker waits until the trailer is properly positioned against the bumpers. Then the dock attendant uses a simple push bar to contact a release latch on the restraint (Fig. 43). The restraint hook, which is upward biased, then raises up and engages the trailers ICC bar. Upon completion of loading/unloading, the dock worker uses the push bar to lower the hook arm to a stored position. On units equipped with a hook throat sensor bar, the inside and outside communication lights will change to the proper sequence automatically. When the hook is in the stored position the outside communication light will be green and the inside light will be red. When the hook is activated and properly engages the underride guard, the inside light changes to green and the outside light changes to red. Units with no hook sensor bar require manual changing of the communication lights. Manual restraints are extremely reliable and require no lubrication.

Powered push button restraints offer a higher level of automation and convenience. The restraint hook is raised and lowered automatically at the push of a button (Fig. 44). The hook arm is raised and lowered by a hydraulic pump motor and cylinder (Fig. 45). Push button systems are equipped with hook throat sensor bars and the communication lights change automatically. Programmable solid state controls provide the flexibility to interlock the restraint with other equipment at the loading dock. Powered push button units are very reliable and require no lubrication. Powered models are the easiest to operate.

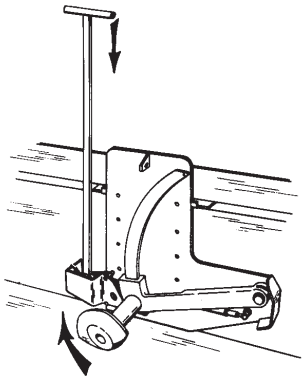

Fig. 43

Fig. 44

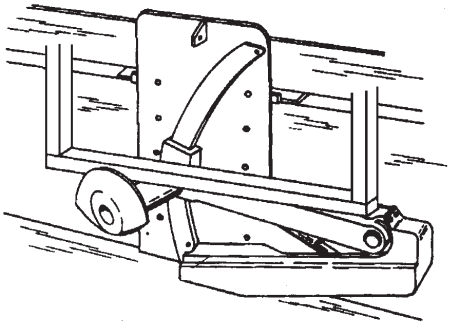

Fig. 45

Powered Wheel Chocks

Because conventional restraint systems depend on engaging a truck's ICC bar, they cannot effectively restrain all trucks that arrive at your dock. Trailer types that may not be restrainable with ICC bar dependant systems include:

- Hydraulic lift gate trailers
- Trailers with badly damaged ICC bars
- Lowboy trailers that have no ICC bar
- Tandem hitch trailers

Before powered wheel chocks were introduced, the only restraint device available for these trailers was a manual wheel chock. However, manual wheel chocks are not effective in stopping a tractor/trailer on ice, snow, moisture, or loose gravel.

To activate a powered wheel chock, the truck simply backs up to the dock as it normally would. The unit is activated by pushbutton; fully automatic activation is also available. The powered chock then rises out of its storage pocket and moves toward the trailer's tires (Fig. 46). Once the chock contacts the tires it snugs the trailer to the dock and locks in place. The communication lights change automatically. The chock is released by the push of a button. Powered chocks are very reliable and require minimal maintenance. Powered wheel chocks are the most versatile restraint system with the capability to restraint virtually any trailer.

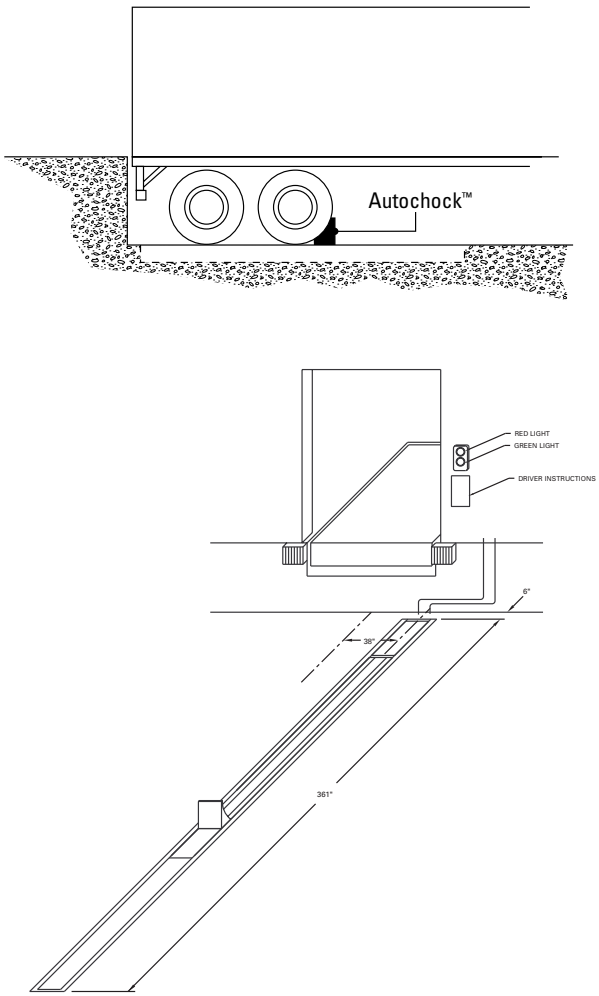

Fig. 46

Dock Run-off Protection

It is important to provide run-off protection on unoccupied dock positions. If protection is not in place, lift trucks can inadvertently drive off the edge of the loading dock, exposing the dock worker to serious injury or death and damaging the lift truck and cargo.

Causes for dock run-off include:

- Slippery dock conditions – rain, snow, ice, and condensation can cause slippery conditions that increase the chances of personnel and equipment sliding off the dock.
- Backing out of a trailer – when loading/unloading a trailer, a lift truck operator frequently backs onto the adjacent dockleveler. If this dock position is vacant and the lift truck operator backs too far, the equipment and operator could go over the edge.
- Equipment problems – mechanical problems such as brake failures, steering problems, and accelerator problems can lead to inadvertent dock run-off.
- Wheeled carts – for years several dock equipment purchasers have installed run-off guards to keep rolling carts from dropping off the dock.

There are two types of dock run-off protection, gate barriers and lip barriers.

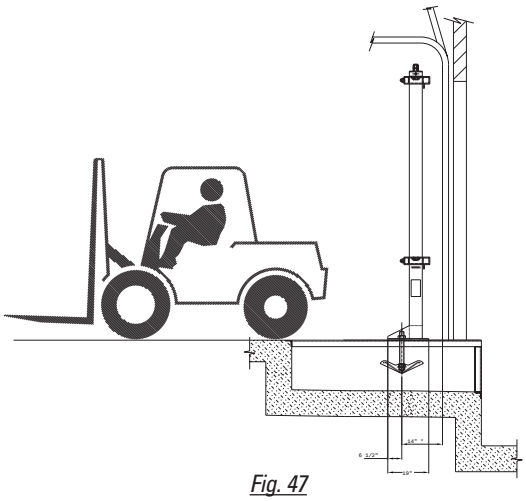

Fig. 47

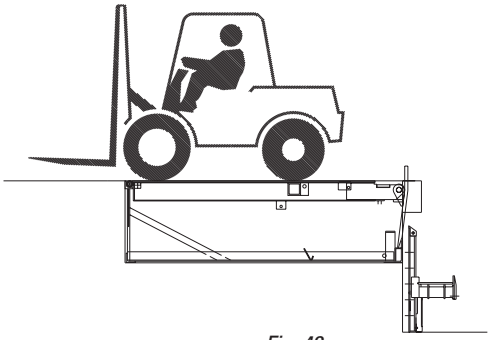

Fig. 48

Gate Barriers

Gate barriers provide run-off protection for personnel and equipment with a cross bar located 36" above floor level (Fig. 47). The cross bar is released manually and uniformly counterbalanced throughout its travel with an upward bias to clear the door in the up position. The cross bar stores above the door opening to provide full opening access for loading/unloading. The cross bar is manually stored with the aid of a pull strap. Gate barriers are very reliable and require no lubrication. The gate can be optionally interlocked with the trailer restraint.

In addition to providing run-off protection, gate barriers also provide bollard type protection for the lintel, overhead door, door tracks, and door mechanisms.

Lip Barriers

Dockleveler lip barriers provide run-off protection through a 6" high barrier that extends above floor level when the leveler lip is stored (Fig 48).

SELECTING SEALS AND SHELTERS

Seals and shelters close the space between the trailer and the building (Fig. 49) They help maintain a controlled atmosphere on the dock and the protect the cargo. Seals and shelters also improve productivity, energy efficiency, safety and security.

There are two types of sealing systems: seals and shelters. Seals are made of foam covered with an industrial fabric and attached to a wood or steel frame (Fig. 50). They are mounted around the loading door and seal against the back of the truck. Shelters have a rigid or flexible frame, mounted to the building wall around the loading door. The frame is equipped with curtains that project inward and seal against the outside walls of the truck at the rear (Fig. 51). Since trailers sway about during loading and unloading, both types use abrasion resistant industrial fabrics on their sealing surfaces.

When selecting a sealing system review the truck types that will be using the facility, the driveway slope, the dock height, the bumper projection from the building wall, the building wall construction and the door dimensions.

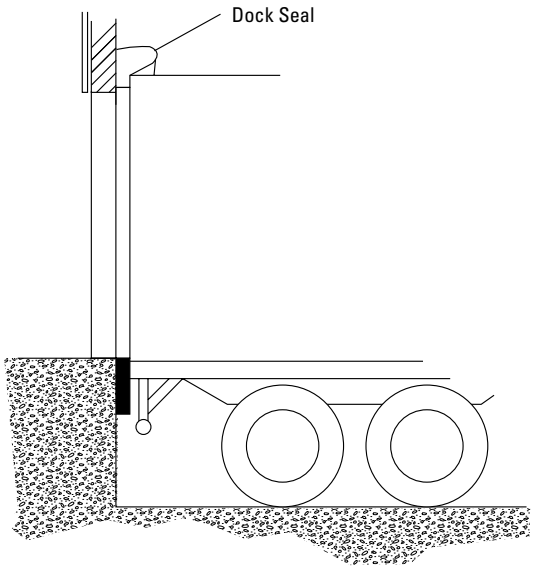

Fig. 49

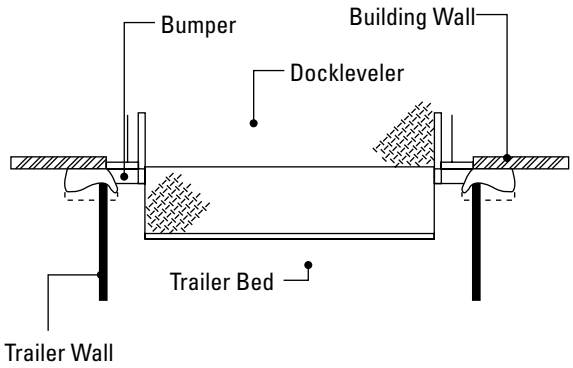

Fig. 50

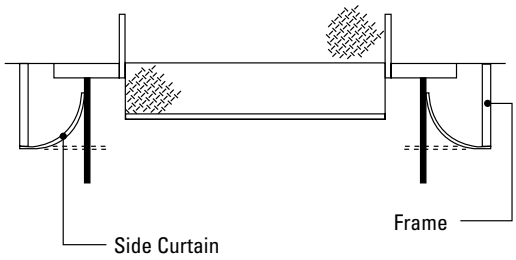

Fig. 51

Compression Foam Dock Seals

Compared to shelters, compression seals are more effective in sealing the space between the truck and the dock at a lower cost. However, they accommodate a narrower range of truck sizes, and are not effective on door sizes over 9' wide. For example, this seal does not work well with trucks that have rear loading platforms (Fig. 52). Seals also can limit access to the trailer interior.

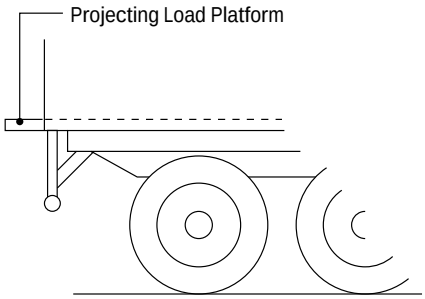

Fig. 52

To serve most trucks, maintain a 7'3"-7'7" wide front opening between the dock pads (Fig. 53). Specify beveled side pads (Fig. 54, next page), when the loading door is wider than 7'7".

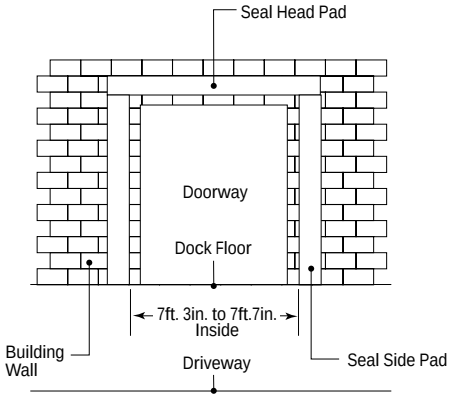

Fig. 53

Place head pads with their bottom edges at least 3" below the top of the truck (Fig. 55). Adjustable height head pads are available and can be moved up and down on tracks. For tall dock doorways and a wide range of trailer heights, replace the head pad with a fixed head curtain to create a hood style seal (Fig. 56).

When specifying compression foam dock seals, also follow these application guidelines:

- The seal's compressive force on the building wall is about 80 lbs. per square foot of pad length.
- Allow for a minimum of 4" from the building wall to the face of the dock bumper to accommodate the compressed thickness of the seal.
- The pad should project 6" in front of the bumper. The maximum projection is 8" and minimum is 4".
- When the driveway is recessed and the driveway slope is more than 2%, specify a tapered seal (Fig. 57). For each 1% of driveway grade, the seal should be tapered 1" over its length.

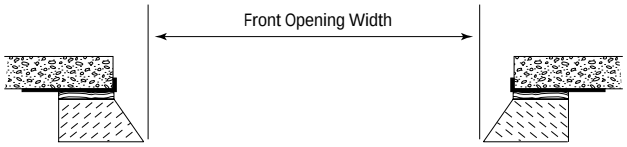

Fig. 54

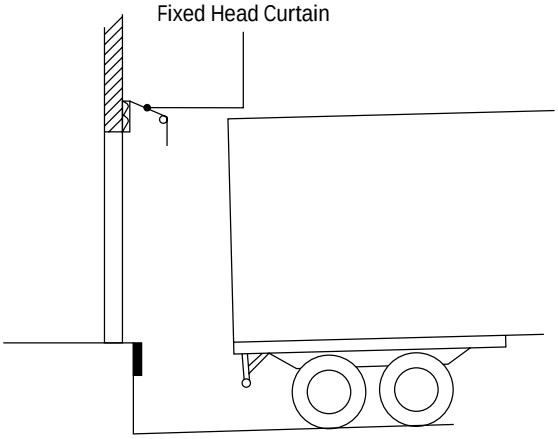

Fig. 56

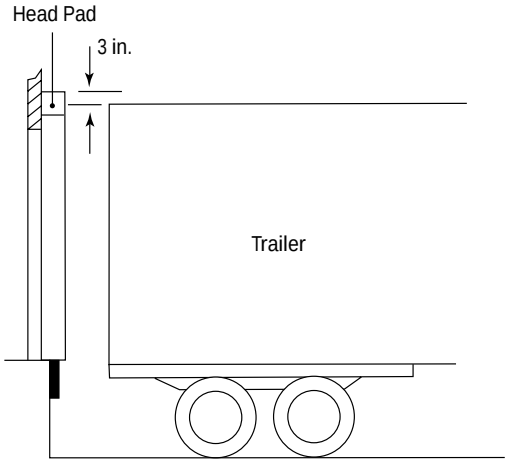

Fig. 55

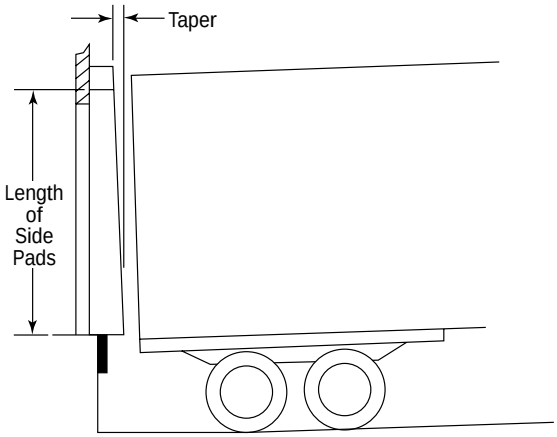

Fig. 57

Truck Shelters

A truck shelter provides full width and height access to the rear opening of trailers but it does not seal the air gap along the hinge of a trailer's swing out doors. The shelter includes a frame, covered with a translucent material mounted on the building wall. Curtains then project inward from this frame. As the trailer backs into the curtain opening the curtains deflect and seal against the sides and top of the truck.

Use shelters with loading doors larger than 9' wide or 10' high. Also use them for trucks with extended tailgates or rear platforms (Fig. 52) or when full access is required.

When specifying shelters, also follow these application guidelines:

- The normal minimum shelter width is 11'6", (O.D.), measured across the side frames. The standard opening width of a shelter is 7'0", measured between the insides of the side curtains.
- Set the bottom edge of the head curtain 6" below the height of the lowest truck to be serviced (Fig. 58).
- Set the top of the shelter at least 18" above the top of the highest truck to be served (normally 15' off grade).
- Design shelters to project 14" to 20" in front of the dock bumpers (Fig. 58). For shelters wider than 12'0", increase the shelter projection by 6" over the minimum recommendation.
- Rigid shelters have steel support brackets, which protect and support the side members. Mount these brackets on the building foundation. Install the brackets flush with the dock floor and have them project 6" past the shelter frames.

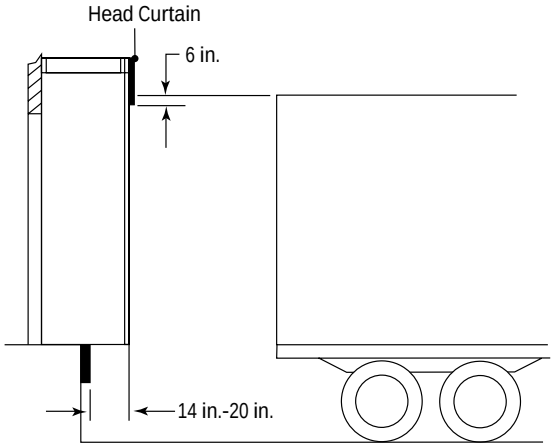

Fig. 58

ACCESSORIES

Selecting Dock Doors

Inside/outside loading docks require doors at each dock position to keep the inside environment separated from the outside when there is no a truck at the dock. Usually these doors are opened only once for each truck and kept open during loading. For this reason, manually operated overhead sectional or roller doors are the most common. Sectional doors have rollers, which run inside tracks are smoother and quieter. Also they are thicker and stronger against wind and impact as compared with roller doors; and can be insulated. If the doors ride in tracks, the tracks should be protected with concrete filled pipes.

Door widths are commonly 8'0" and their heights are commonly 8', 9' or 10'. Dimensions of the door are determined by the typical trucks, the desired seal or shelter, and the plant environmental needs. If clear access to the entire trailer width and height is required, the door must extend about 13'-14' above the driveway and be at least 8'6" – 9'0" wide.

To maintain effective control of refrigerated operations with foam pad seals, usually you need to use doors narrower than 8'0". For refrigerated facilities, also specify insulated dock doors.

Selecting Dock Lights

Most trailers have no interior lights and their lengths of 40', or more, make them dark and hazardous. Specify loading lights for each dock position to improve productivity and reduce worker fatigue and accidents.